# 24800 BMW R1300R/GS Belly Pan Fitting Instructions

Any questions?
sales@pyramidmoto.co.uk
+44 (0)1427 677990
www.pyramidmoto.co.uk

Follow us on social media and feel free to leave us a review!

**Kit Includes:**

| | | | |
|---|---|---|---|
| 1. | X3 | C24800A+B+C | Belly Pan (left, centre and right panels) |
| 2. | X1 | CFK22400A | Bracket LHS |
| 3. | X1 | CFK22400B | Bracket RHS |
| 4. | X4 | CBOLM80005 | M8 x 20mm Stainless Steel Hex Head Bolt |
| 5. | X4 | CWASM80002 | M8 Stainless Steel Washer |
| 6. | X6 | CNUTM60011 (Pre-fitted by Pyramid) | M6 Stainless Steel Cage Nut |
| 7. | X6 | CBOLM60007 | M6 x 12mm Stainless Steel Flanged Button Head Bolt |
| 8. | X6 | CCAPM60002 | M6 Plastic Bolt Cap |
| 9. | X8 | CRIV0004 | Plastic Push Rivet |
| 10. | X1 | CTAP0004 (Pre-fitted by Pyramid) | Heat Shield Tape |
| | X1 | CBRA0411 | Blue/Red decals (included with 24800C only) |
| | X1 | CBRA0412 | Grey decals (included with 24800D only) |
| | X1 | C24800CM | Matte Black Centre Panel (included with painted variants only) |

**Please note:** We recommend you place your motorcycle on a paddock stand to aid in this installation. Place a protective cloth beneath the engine to help protect the Belly Pan against any unwanted damage.

- **Assembly Instructions**

  Start by fitting the M6 cage nuts, as illustrated in **Fig 1+2**. Take note of the orientation of each cage nut to avoid incorrect installation (the cage nuts must be on the inside of the brackets when fitted to the engine).

- The brackets can now be fitted to the motorcycle. See **Fig 1+2** for fitment positions and fixings required. Fully tighten the mounting points before attaching the belly pan. **Torque setting for each M8 mounting point - 21Nm**

- Next, fit the belly pan side panels to the centre panel using the plastic push rivets supplied. Refer to **Fig 3** for the correct assembly.

- Ensure all brackets are fully tightened, then attach the belly pan assembly to the brackets using the remaining fixings (**six** M6 x 12mm stainless steel flanged button head bolts). See **Fig 4+5**.

- All mounting points are now connected — fully tighten all fixings. **Be sure to check all fittings periodically.**

**If you have ordered a variant which includes decals - please see our website images for a positioning guide.**

*NOTE: some graphics made need to be trimmed slightly to acheive an accurate fit.*

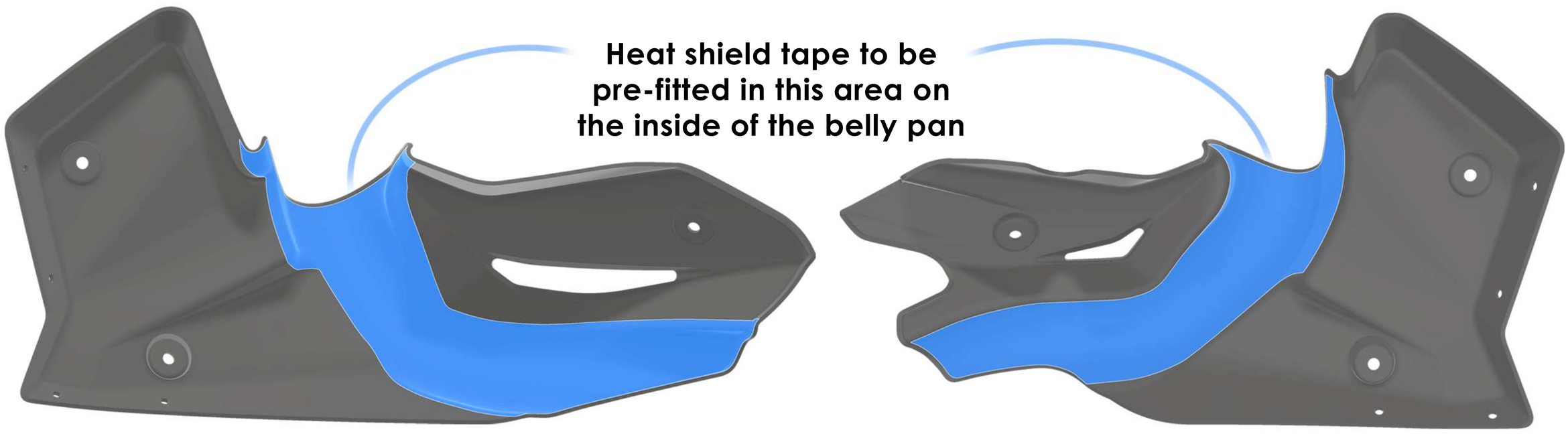


**Fig 1** Right-hand side bracket fitted

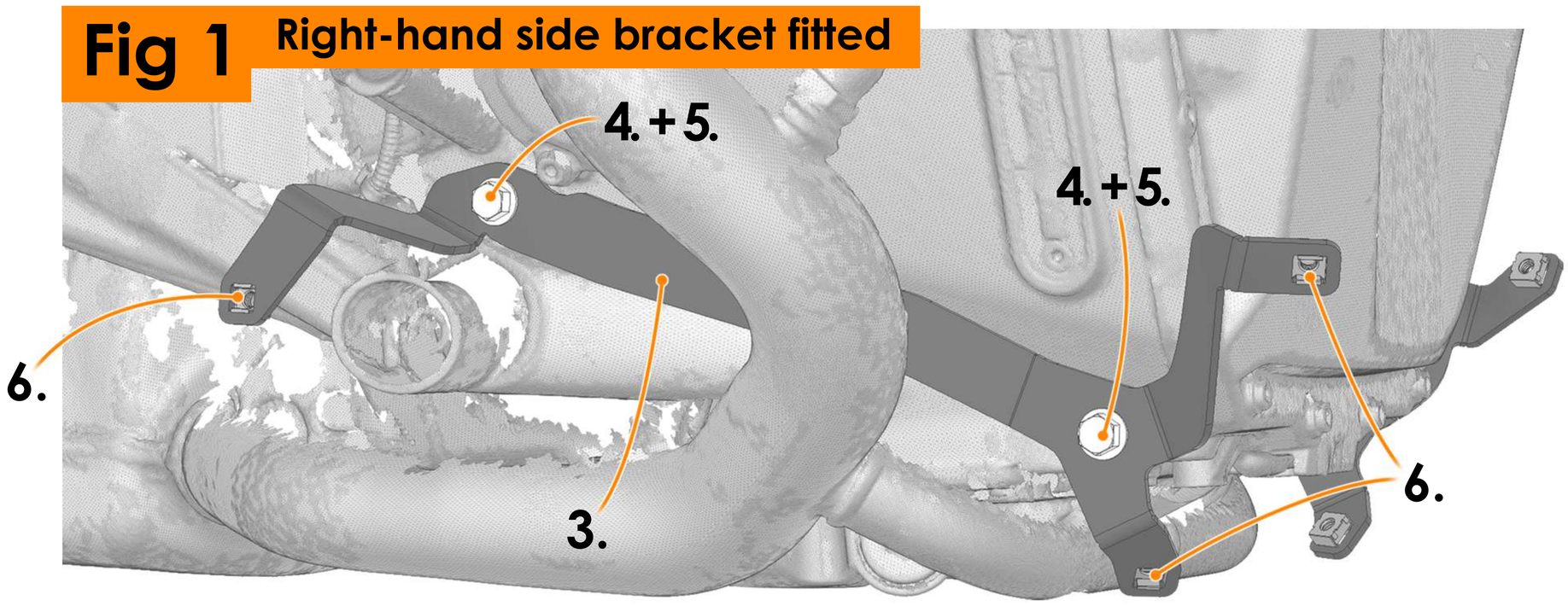


**Fig 2** Left-hand side bracket fitted

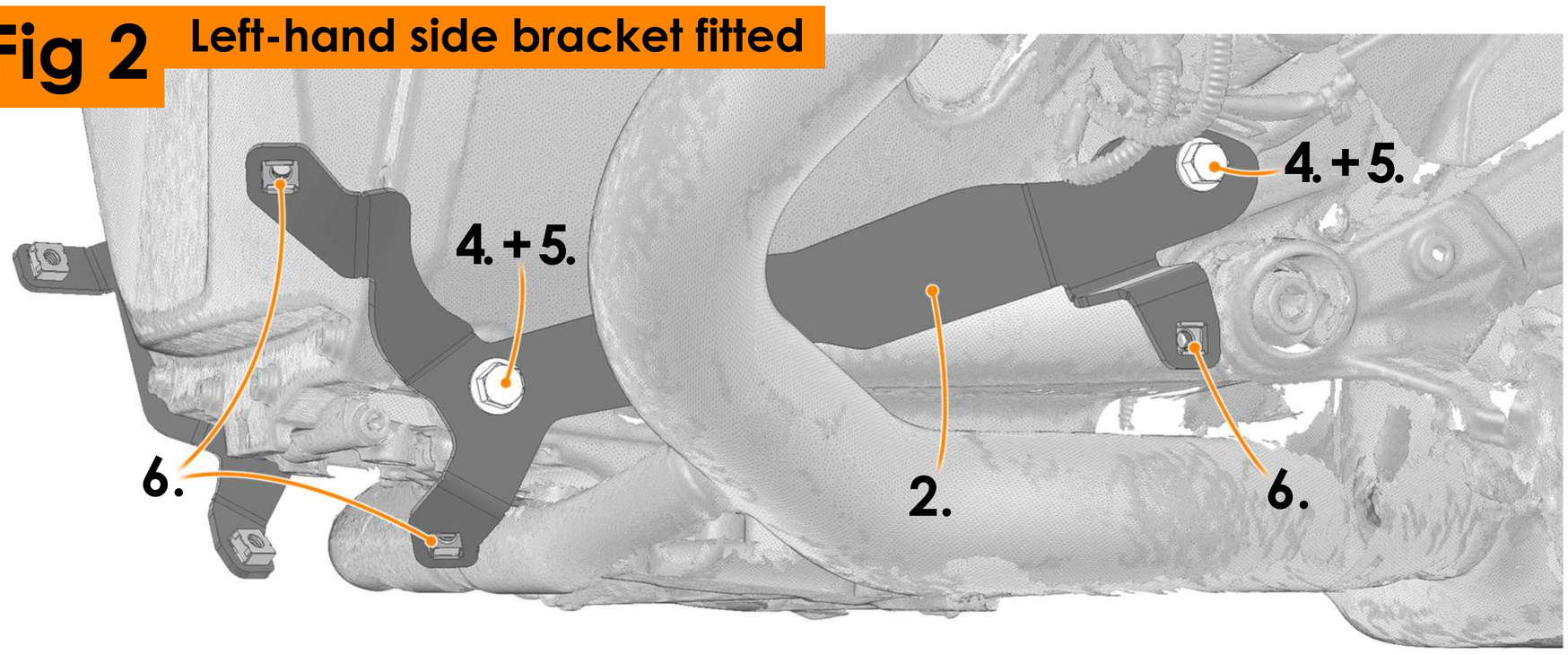

# 24800 BMW R1300R/RS/GS Belly Pan Fitting Instructions

**Fig 3**

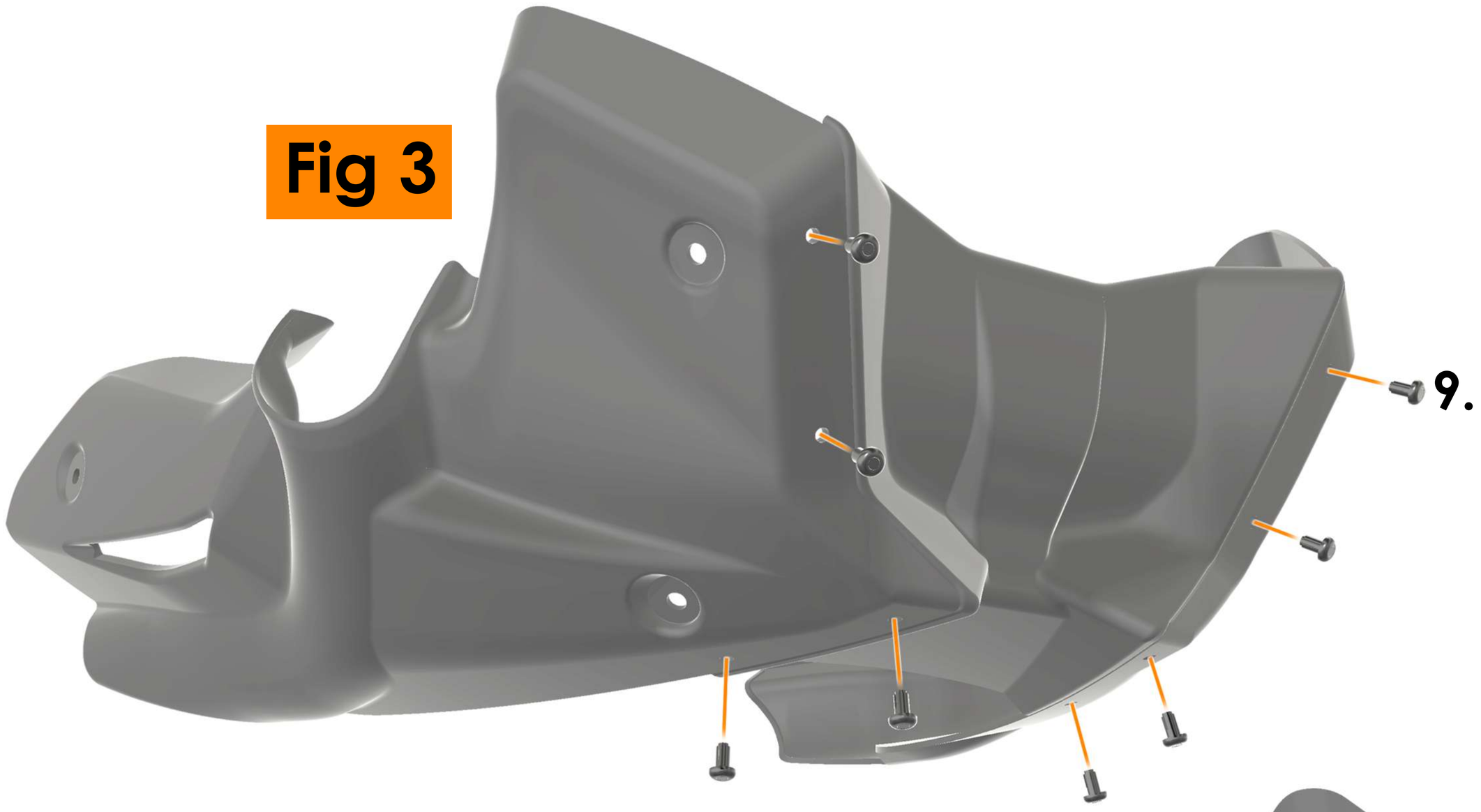


**Fig 4**

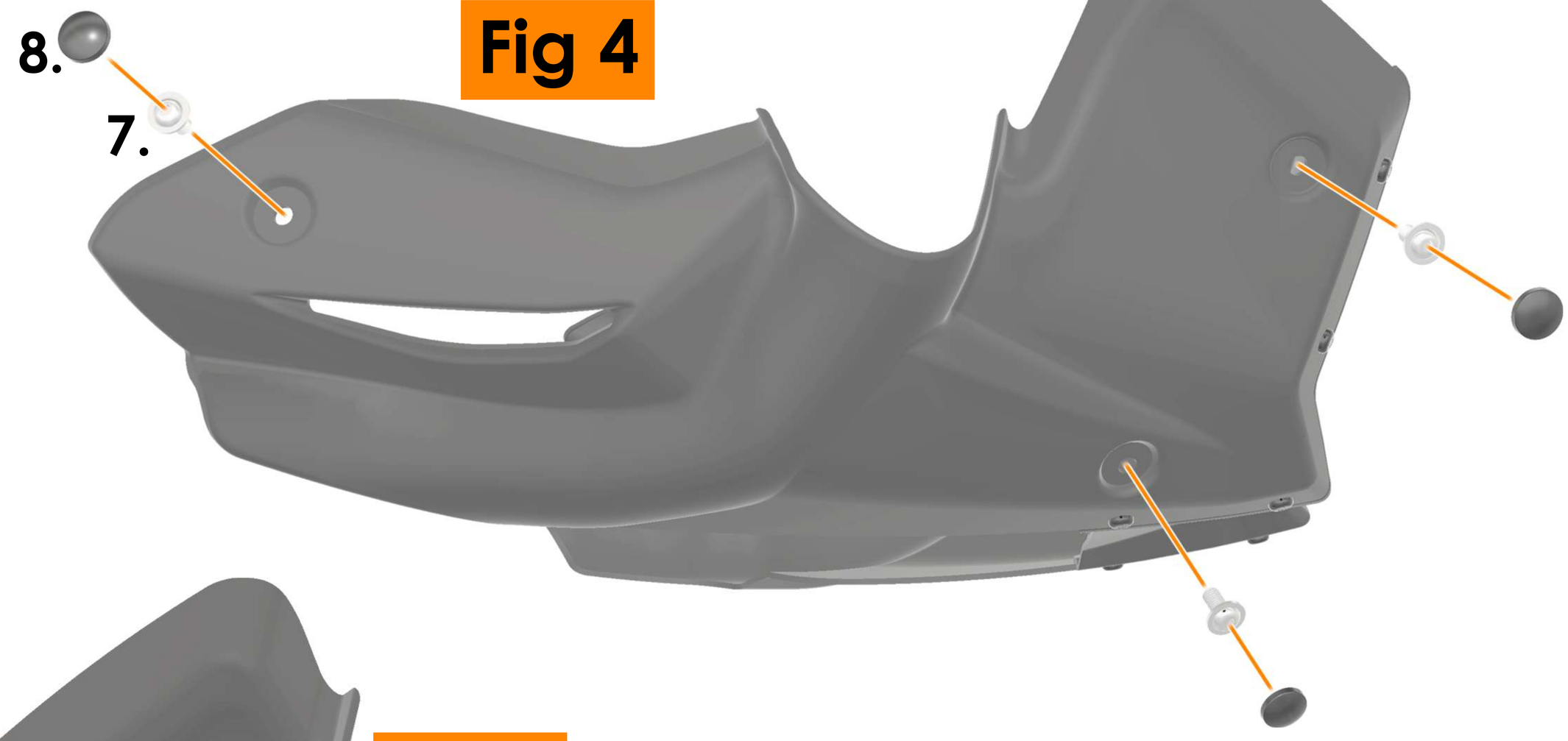


**Fig 5**

